Was this document helpful?
smarttech.com/docfeedback/171254

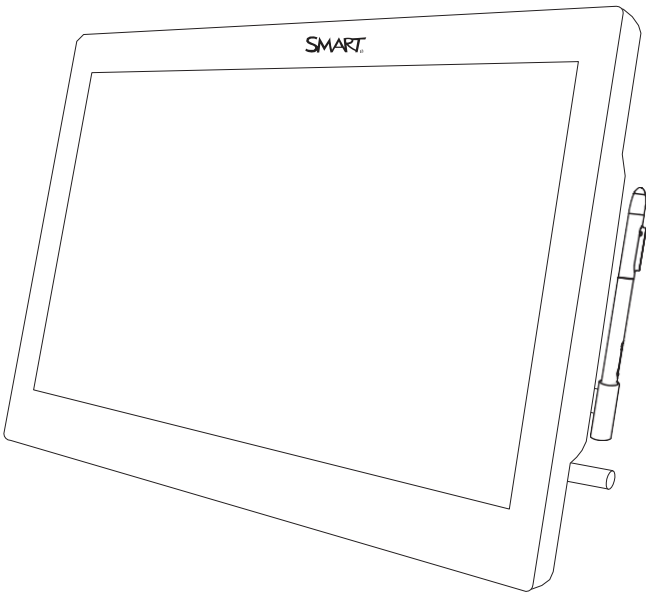

SMART Podium™ 624 and 624 Pro

interactive pen displays

USER'S GUIDE

SMART®

Trademark notice

SMART Podium, SMART Board, SMART Notebook, SMART Meeting Pro, SMART Ink, smarttech, the SMART logo and all SMART taglines are trademarks or registered trademarks of SMART Technologies ULC in the U.S. and/or other countries. Microsoft, Windows, Excel, PowerPoint and Visual Studio are either registered trademarks or trademarks of Microsoft Corporation in the U.S. and/or other countries. Apple, Mac and OS X are trademarks of Apple Inc., registered in the U.S. and other countries. Intel and Core are trademarks of Intel Corporation., registered in the U.S. and other countries. All other third-party product and company names may be trademarks of their respective owners.

Copyright notice

© 2018 SMART Technologies ULC. All rights reserved. No part of this publication may be reproduced, transmitted, transcribed, stored in a retrieval system or translated into any language in any form by any means without the prior written consent of SMART Technologies ULC. Information in this manual is subject to change without notice and does not represent a commitment on the part of SMART.

This product and/or use thereof is covered by one or more of the following U.S. patents:

www.smarttech.com/patents

05/2018

smarttech.com/kb/171254

Important information

Before you install and use the interactive pen display, read and understand the safety warnings and precautions in this user's guide. These safety warnings and precautions describe the safe and correct operation of the interactive pen display and its accessories, helping you to prevent injuries and equipment damage. Ensure that the interactive pen display is always being used correctly.

WARNING

- If the screen is damaged, do not touch any liquid that leaks from it. This liquid is an irritant. If the liquid makes contact with your skin, eyes or mouth, immediately rinse the area with running water for at least 15 minutes. Consult a physician if the liquid makes contact with your eyes or mouth.
- Do not open or disassemble the interactive pen display. You risk electrical shock from the high voltage inside the casing. Opening the casing also voids the warranty.
- Do not let children play with the cordless pen. They may accidentally remove the small tip, which can be a choking hazard.
- If the screen is damaged, be careful of glass fragments that can cut or injure.
- Do not disassemble the stand. You risk physical injury or damage to the stand. Disassembling the stand also voids the warranty.
- Do not operate the stand's incline adjustment levers when the interactive pen display is not mounted on the stand, and do not lift the stand by the adjustment levers. The stand is spring-loaded, and without the weight of the interactive pen display, you risk injury or damage to the stand.

CAUTION

Interactive pen display

- Avoid excessive vibration of the interactive pen display. Hitting or dropping the interactive pen display can damage the protective plate or other components.
- Do not touch the screen with sharp or metallic objects that could scratch the screen.
- Use only a damp cloth to clean the screen. Do not apply glass cleaner, organic solvents (such as alcohol), or even a mild detergent to the screen. Using these cleaners, can damage the screen's finish or the unit's electronics. Using such cleaners also voids the warranty.

- Use only a damp cloth or a cloth dampened with very mild detergent to clean the unit casing or cordless pen. Do not apply paint thinner, benzene, alcohol or other solvents to the casing. Using these cleaners, can damage the finish and also voids the warranty.
- Use only the power adapter that came with the interactive pen display. Other adapters will not work properly, can damage the interactive pen display, and can create a fire hazard. Using a different power adapter also voids the warranty.
- Use only the cordless pen that came with the interactive pen display. Pens or styluses from other products can damage the screen.
- Do not use the interactive pen display in a facility control system or any other environment that requires extremely high reliability; the interactive pen display can interfere with or cause other electronic devices to malfunction, or other devices can interfere with or cause the interactive pen display to malfunction. Where use is prohibited, turn off the interactive pen display to prevent the possibility of it interfering with or causing other electronic devices to malfunction. SMART does not accept any liability for direct or consequential damages.
- If you transport the interactive pen display, we strongly recommend that you completely repackage it using the original carton. The packaging was designed to provide the best possible protection against shock and vibration. If the original carton is no longer available, pack all components with as much padding as reasonably possible to protect the components from excessive vibration or shock. Do not include loose components in the packaging that could mark, scratch or otherwise damage the screen during transport.
- Put the interactive pen display down carefully to ensure you do not damage the buttons.
- Do not place the interactive pen display on a surface that will mark, scratch or damage the screen.
- Do not place sharp or heavy objects on the interactive pen display.
- If you move the interactive pen display, adjust the stand to its full upright position, and then use both hands to hold the display unit and the stand separately.
- Do not expose the interactive pen display to high voltage electrostatic discharges or to a build-up of electrostatic charge on the screen. This can cause discoloration and blotches on the screen.
- If the interactive pen display is damaged, turn off the display and disconnect the power adapter to prevent further damage or injury.

Cordless pen

- The cordless pen is a sealed unit that contains electronics but no batteries. Opening the cordless pen will damage these electronics, making the cordless pen unusable and voiding the warranty.
- Do not touch the screen with any instrument other than a compatible projected capacitive (PCAP) stylus pen, or the supplied cordless pen. The use of other instruments may damage the screen.
- Do not apply excessive pressure with the pen. This can shorten the pen's life.
- Replace a cordless pen nib when the nib wears down. If a pen nib wears down too far, you might scratch or damage the interactive pen display's surface. Extra nibs are supplied with each interactive pen display.
- Avoid excessive vibration of the cordless pen. Hitting or dropping the cordless pen can damage the pen's components.
- Do not immerse the cordless pen in water.

Environment

- Avoid setting up and using the interactive pen display in an area with excessive levels of dust, humidity and smoke or where it is exposed to direct sunlight, severe temperature changes, heat from other appliances, water or any other liquid. Operate the interactive pen display within a temperature range of 41°F and 95°F (5°C to 35°C) and a humidity range of 20% to 80% (non-condensing). However, you can store the interactive pen display within a temperature range of -4°F to 140°F (-20°C to 60°C) and a humidity range of 20% to 90% (non-condensing).
- Do not modify the power cable. Handle it carefully and avoid bending it excessively. Do not place the power cable where it is likely to be stepped on or pinched by items placed on or against it. If you must run a cable over the floor, lay it in a flat, straight line, and secure it to the floor with tape or a cable management strip of contrasting color.
- The interactive pen display comes with a three-prong, grounding-type power plug designed to fit into a grounding-type power outlet. If you cannot insert the plug into a power outlet, contact an electrician to replace the power outlet. Do not modify the power plug.
- Place the interactive pen display in a location where users will have clear and direct access to the main power plug, because they must be able to disconnect the unit at all times. Always disconnect the interactive pen display before you install any devices or perform any maintenance.

- If possible, disconnect the interactive pen display before any thunderstorms. However, do not touch the unit or the unit's power plug during a thunderstorm, because there is a risk of electrical shock.
- Disconnect the interactive pen display if you will not use it for an extended period.
- If the interactive pen display requires replacement parts, use parts that are specified by SMART Technologies.
- Do not expose the interactive pen display to rain or moisture.

Federal Communication Commission interference statement

This device complies with Part 15 of the FCC Rules. Operation is subject to the following two conditions:

1. This device may not cause harmful interference, and
2. this device must accept any interference received, including interference that may cause undesired operation.

NOTE

This equipment has been tested and found to comply with the limits for a Class B digital device, pursuant to part 15 of the FCC Rules. These limits are designed to provide reasonable protection against harmful interference in a residential installation. This equipment generates, uses and can radiate radio frequency energy and, if not installed and used in accordance with the instructions, may cause harmful interference to radio communications. However, there is no guarantee that interference will not occur in a particular installation. If this equipment does cause harmful interference to radio or television reception, which can be determined by turning the equipment off and on, the user is encouraged to try to correct the interference by one or more of the following measures:

- Reorient or relocate the receiving antenna.
- Increase the separation between the equipment and receiver.
- Connect the equipment into an outlet on a circuit different from that to which the receiver is connected.
- Consult the dealer or an experienced radio/TV technician for help.

CAUTION

Any changes or modifications not expressly approved by the party responsible for compliance could void the user's authority to operate this equipment

Innovation, Science and Economic Development Canada statement

This device complies with RSS-210 of the Innovation, Science and Economic Development Canada Rules. Operation is subject to the following two conditions:

1. This device may not cause harmful interference, and
2. this device must accept any interference received, including interference that may cause undesired operation.

Cet appareil est conforme à la norme ISED CNR-210 pour les appareils radio agréés. Son fonctionnement est soumis aux deux conditions suivantes:

1. le dispositif ne doit pas produire de brouillage préjudiciable, et
2. ce dispositif doit accepter tout brouillage reçu, y compris un brouillage susceptible de provoquer un fonctionnement indésirable.

EU declaration of Conformity

Hereby, SMART Technologies ULC declares that the radio equipment type LCD Monitor, SP624 is in compliance with Directive 2014/53/EU.

The full text of the EU declaration of conformity is available at the following Internet address: smarttech.com/compliance

Transmitting Band (KHz)	Maximum Transmit Power (dBuA/m@10m - Inductive device)
667	-28.56

Contents

Important information ..... **i**

Federal Communication Commission interference statement iv
Innovation, Science and Economic Development Canada statement v
EU declaration of Conformity v

Chapter 1: Welcome **1**

About this guide 1
Features 1
Components 4
Side buttons 5
Cordless pen and holder 6
Connection panel 7

Chapter 2: Installing the interactive pen display **9**

System requirements 9
Getting ready to install the interactive pen display 11
Connecting the interactive pen display to your computer 14
Orienting the interactive pen display 15
Connecting the interactive pen display to other devices 16

Chapter 3: Installing SMART software **19**

About SMART software 19
Installing SMART Learning Suite 20
Installing SMART Meeting Pro software 20

Chapter 4: Using the interactive pen display **21**

Turning the interactive pen display on and off 22
Using the cordless pen 23
Writing or drawing digital ink 27
Erasing digital ink 28
Using gestures 29
Working with SMART Ink 31

Chapter 5: Maintaining the interactive pen display **37**

Cleaning the screen and cordless pen 37
Maintaining ventilation 38
Preventing condensation 38

Chapter 6: Troubleshooting the interactive pen display **39**

Resolving issues with power and video 39

Resolving issues with the cordless pen and touch 40
Resolving issues with the image 43
Resolving Mac-specific issues 47

Appendix A: Adjusting video settings with the on-screen display (OSD) menu 49

Changing settings in the OSD menu 50
OSD menu settings 51

Appendix B: Hardware environmental compliance 53

Waste Electrical and Electronic Equipment (WEEE) 53
More information 53

Chapter 1

Welcome

About this guide 1
Features 1
Components 4
Side buttons 5
Cordless pen and holder 6
Connection panel 7

This chapter introduces the SMART Podium™ 624 and 624 Pro interactive pen display.

About this guide

This guide is intended for people who set up and use the interactive pen display in their organizations. Other documentations and resources are available on the SMART support site (support.smarttech.com).

Features

The SMART Podium 624 interactive pen display enables a presenter to face an audience and mirror a connected computer to a large format display. The interactive pen display facilitates interactivity in meeting rooms, lecture halls and auditoriums. It also enables you to do everything you can do at your computer—write and erase ink, open and close applications, conference with others, create new documents or edit existing ones, visit websites, play and manipulate video clips and more— just by touching the display's surface with the cordless pen or your finger. Use the pen for precise annotation over presented materials and saving markups in many applications. The SMART Podium display includes easily accessible buttons, a pen rest, a stand and HDCP compliancy. The display works with your computer and SMART Product Drivers to provide a reliable interactive experience.

You can also interact with content from additional devices, such as a document camera, that you can connect using a USB receptacle in the side connection panel. By connecting the interactive pen display to a projector or a second display, you can share your interactive experience with others, all while facing the audience. As others view your interactions with your digital materials, you can write confidently and smoothly with SMART Ink®. You can save your work directly into the SMART software application included with the interactive pen display and other commonly used software applications, such as Microsoft® Office (see *Using SMART Ink with Microsoft Office* on page 34).

Refer to the following table for more feature highlights.

Feature	Description
Software	The SMART Podium 624 interactive pen display includes either SMART Learning Suite or SMART Meeting Pro® software. To use all the features of the interactive pen display described in this guide, go to smarttech.com/software and ensure that you have the latest version of SMART software and SMART Product Drivers installed on your computer.
Cordless pen and holder	Use the interactive pen display's cordless pen to control your computer and comfortably write over any application from the interactive pen display. Because the cordless pen is your interactive point of contact on the screen, you can rest your hand naturally on the interactive display as you write. The pen is battery-free, so you never have to worry about replacement batteries. Securely rest the pen in the side-mounted pen holder when you're finished writing, so you always know where to find it. You can also secure the pen to the side of the interactive display with a tether.
Pen color buttons	Use the pen color selection buttons on the side of the interactive pen display to select black, red or blue for the cordless pen.
SMART Ink	SMART ink lets you write over websites, videos, and into PDFs and Microsoft Office files, and save your notes in almost any file type (see *Working with SMART Ink* on page 31).
Smooth Tilt Stand	Easily adjust the interactive pen display's height and angle by pulling up on the lever on the Smooth Tilt Stand.
Interactive surface	The interactive pen display has a thin-film transistor liquid crystal display (LCD) screen and acts as an output and input device when you touch it with the cordless pen. The native aspect ratio is 16:9 with flexible scaling options to support 4:3 and 16:10.

Feature	Description
Power	The interactive pen display uses a 12V DC power supply adapter, which comes with the unit. **NOTE** The power supply adapter can be connected to an electrical supply in the range of 100–240V AC, 50/60 Hz.
Power saving	The interactive pen display conforms to the Video Electronics Standards Association (VESA) power saving guidelines.
Capacitive touch technology	The interactive pen display uses projected capacitive (PCAP) touch technology to track the position of the cordless pen on the interactive surface.
Durable surface	The interactive surface features scratch-resistant hardened glass.
Cables	Connect the interactive pen display to your computer with the included cables. See the *SMART Podium quick connect guide* (smarttech.com/kb/171255) for more information. **TIP** If you need to use USB or video cables that are longer than those supplied, see the *SMART Installation Standards* (smarttech.com/kb/171035) for tips on extending these types of cables.
Security	The interactive pen display features a Kensington security slot. Lock the interactive pen display with a security cable (not included) to help safeguard it from theft.
HDCP	The SMART Podium 624 interactive pen display is HDCP 1.4 compliant.
Optional accessories	For more information on optional accessories, contact your authorized SMART reseller (home.smarttech.com/where-to-buy).

Components

This illustration shows you the components of the interactive pen display.

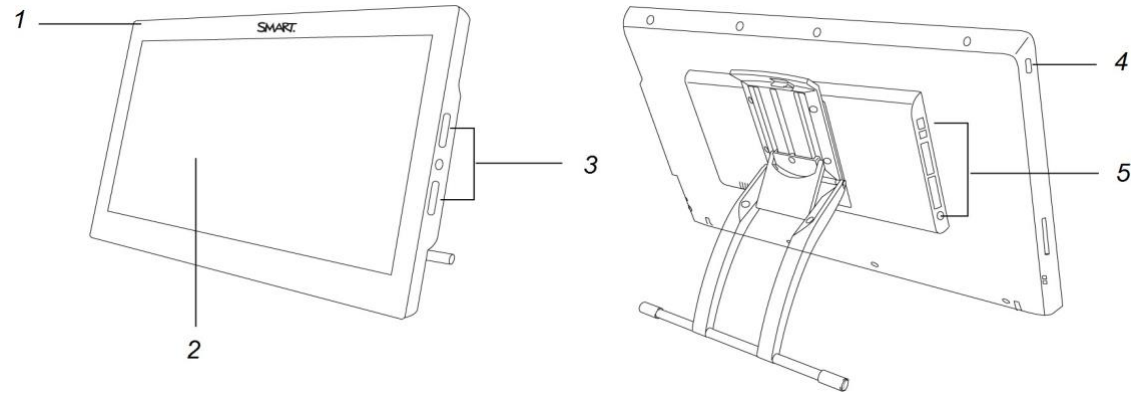

No.	Component	Description
1	Status and Power LEDs	Indicates the power and communication status of the interactive pen display. See *Chapter 6: Troubleshooting the interactive pen display* on page 39 for more information.
2	Display screen (including interactive surface)	Displays your content on a 20.7/8" (52.7 cm) × 11.5/8" (29.7 cm) high definition progressive scan LCD display to show wide format video and high resolution images.
3	Side buttons	See *Side buttons* on the facing page.
4	Power button	Indicates whether power is reaching the interactive pen display. See *Chapter 6: Troubleshooting the interactive pen display* on page 39 for more information.
5	Connection panel	Contains the connections for a computer and other devices. See *Connection panel* on page 7 for more information.

Side buttons

This illustration shows the buttons on the side of the interactive pen display.

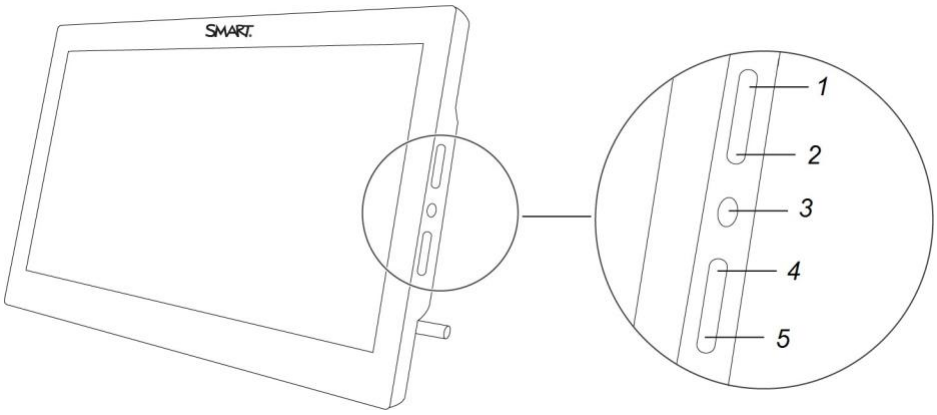

No.	Button	Press this button to:
1	Black ink	Write in black ink.
2	Red ink	Write in red ink.
3	OSD menu	Open the on-screen display (OSD) menu.
4	Blue ink	Write in blue ink.
5	SMART Ink tool bar	Show or hide the SMART Ink tool bar.

Cordless pen and holder

This illustration shows the cordless pen and holder.

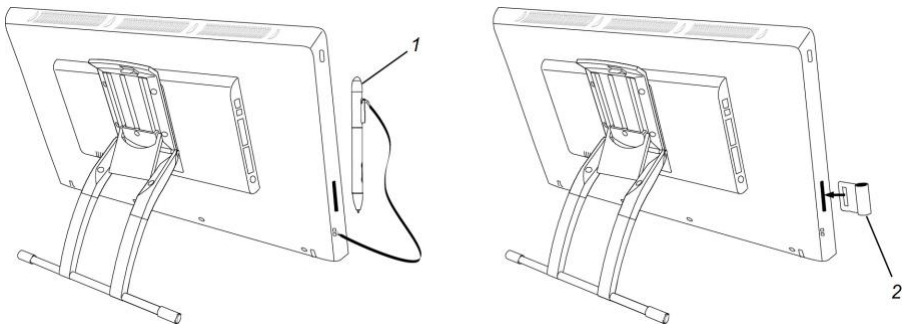

No.	Component	Description
1	Cordless pen	Touch the cordless pen to the interactive pen display surface to control your computer and to write with digital ink. Turn the pen around to use its eraser just as you would use the eraser on a pencil. The cordless pen is battery-free. The pen also features buttons you can use as shortcuts to customizable settings. See *Using the cordless pen* on page 23.
2	Pen holder	Insert the pen holder into the slots on either side of the display and use it to store your pen. Refer to the *SMART Podium quick connect guide* (smarttech.com/kb/171255) for information about installing the pen holder and tether.

Connection panel

This illustration shows the connectors on the side of the interactive pen display.

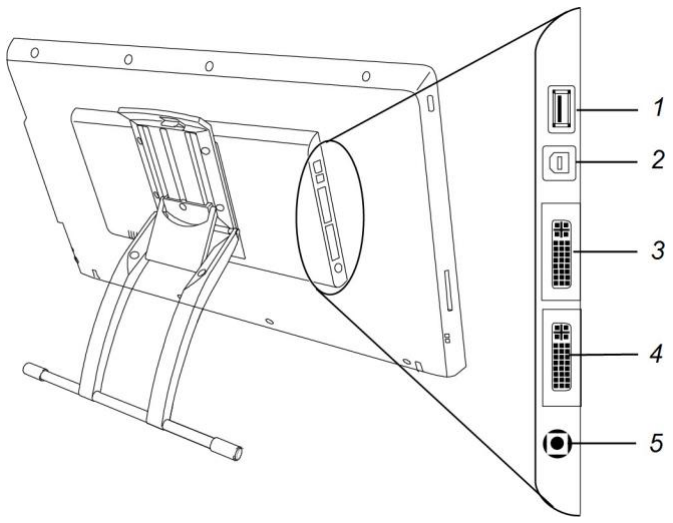

No.	Connector	Description
1	USB A	Connects peripheral devices, such as a USB drive.
2	USB B receptacle	Connects the USB cable from the interactive pen display to your computer or laptop.
3	Video out	Connects the DVI-D cable from the interactive pen display to a second display or device. The second display mirrors the interactive pen display.
4	Video in	Connects the DVI-D cable from the interactive pen display to your computer or laptop.
5	Power cable receptacle	Connects the power cable from the interactive pen display to a DC adapter.

Chapter 2

Installing the interactive pen display

System requirements 9
Operating system requirements 9
Windows operating system 9
OS X operating system software 10
Available receptacles 10
Video cards 10
Monitors and projectors 11
Getting ready to install the interactive pen display 11
Finding the best place for the interactive pen display 11
Setting up your work area 11
Changing the angle of the interactive pen display 12
Removing and installing the Smooth Tilt Stand 12
Connecting the interactive pen display to your computer 14
Orienting the interactive pen display 15
Connecting the interactive pen display to other devices 16
16

This chapter describes the installation of the interactive pen display.

System requirements

Before installing the SMART Podium 624 interactive pen display, make sure your computer meets the following requirements (see also *Chapter 3: Installing SMART software* on page 19).

Operating system requirements

Windows® operating system

- Windows 10
- Windows 8.1
- Windows 7 SP1

OS X operating system software

- macOS High Sierra 10.13
- macOS Sierra 10.12
- Mac OS X 10.11

Available receptacles

NOTES

- The SMART Podium 624 interactive pen display supports DisplayPort video standards. However, the display's video input uses a DVI-D connector, so an adapter will be required. See the *Installation best practices for SMART products* (smarttech.com/kb/171035) for tips on using these and other video adapters.
- To ensure the best image quality on the interactive pen display, set the connected computer's display resolution settings to 1920 × 1080.
- Using a VGA cable longer than 23' (7 m) is not recommended as the video signal quality might degrade. To extend the video signal properly, use a powered extender.

The following receptacles are required on the computer you connect to the interactive pen display.

- DVI, VGA or HDMI video receptacle
- Available USB-A receptacle

NOTE

Some Apple® products require a USB 2.0 hub to be installed between the product's USB 3.0 port and the interactive pen display.

Video cards

The interactive pen display supports both digital (DVI) and analog (VGA) video connections. The DVI connection typically provides the best picture quality and performance.

NOTES

- Ensure your computer's video card is capable of providing a resolution setting of 1920 × 1080.
- Display of HDCP content requires a video card that is HDCP 1.4 compliant.

- The interactive pen display passes the video signal through as it is received. Digital In provides Digital Out, and analog provides Analog Out.

Monitors and projectors

You can use the interactive pen display by itself or with another display. You can connect a projector or monitor, to the display's Video OUT connector. When connected using the Video OUT, the second device mirrors the interactive pen display's image. Install the interactive pen display before connecting a second device.

NOTES

- To ensure the best image quality on the devices connected to the interactive pen display, set the device's display resolution to 1920 × 1080.
- See the hardware and operating system documentation for more information about configuring your computer and operating system for use with multiple monitors.

Getting ready to install the interactive pen display

Before you use the interactive pen display, make sure you determine the best location, work area and angle for the display.

Finding the best place for the interactive pen display

Install the interactive pen display in a cool, dry place without excessive levels of dust, humidity and smoke. Operate the interactive pen display in an environment within a temperature range of 41°F to 95°F (5°C to 35°C) and within a humidity range of 20% to 80% (non-condensing).

To prevent the interactive pen display from overheating, do not block or cover any of the ventilation holes on the top of the unit. Make sure there is adequate airflow around the display and maintain an air gap of at least 4" (0.1 m) on all sides. Avoid putting the display close to other electronic equipment that also generates heat.

You must install SMART Product Drivers on the computer connected to the interactive pen display to enable the display's surface to respond to the touch by the cordless pen or your finger. Use your computer's mouse and keyboard to install SMART Product Drivers before you install the interactive pen display. The interactive pen display cannot provide keyboard or cordless pen functionality until you install SMART Product Drivers.

Setting up your work area

Organize your work area so you can work comfortably. Position the interactive pen display and

your keyboard for easy access without unnecessary reaching.

You can also mount the interactive pen display on an articulated arm or other third-party stands meeting the VESA 200 × 100 specification for display stands.

Changing the angle of the interactive pen display

You can recline the Smooth Tilt Stand to change the angle and height of the interactive pen display. To alleviate glare, you can use the attached Smooth Tilt Stand to change the display's angle. See *Removing and installing the Smooth Tilt Stand* below.

To change the interactive pen display's angle

1. Grab the top of the interactive pen display and pull up on the lever at the top of the stand.
2. Push the interactive pen display down or up to adjust the angle of the display.
3. Release the lever to lock the stand in place.

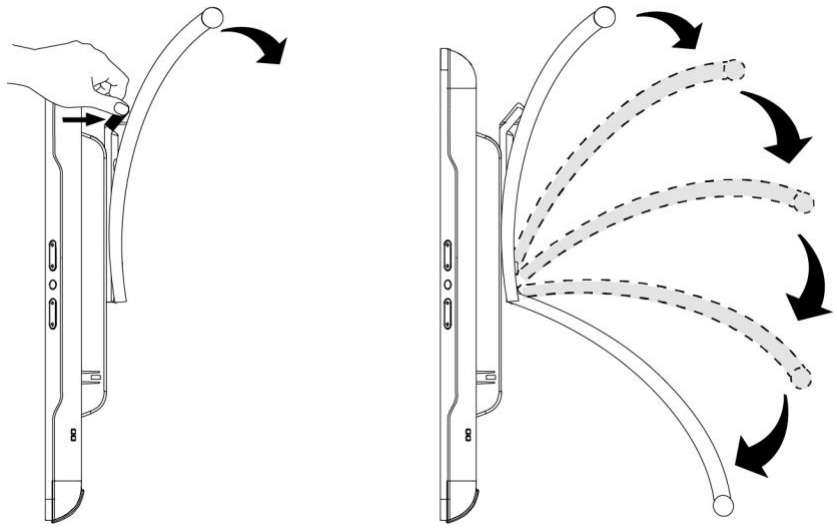

Removing and installing the Smooth Tilt Stand

You can remove the interactive pen display from its stand.

CAUTION

- Before beginning, set down the interactive pen display carefully to ensure you do not damage the buttons. Use a soft cloth or similar item to protect the display's interactive

surface.

- Do not place the interactive pen display on a surface that can mark, scratch or damage the screen.
- The display's ventilation holes must remain at the top of the interactive pen display while it is being used. Do not attempt to install the Smooth Tilt Stand in a position that is different from the standard orientation.

To remove the Smooth Tilt Stand

1. Place the interactive pen display face down on a flat surface.
2. Remove the four screws that attach the stand to the VESA mount on the back of the interactive pen display.
3. Remove the stand.

To reinstall the Smooth Tilt Stand

1. Place the interactive pen display face down on a flat surface.
2. Place the stand on the back of the display with the lever toward the top of the display.

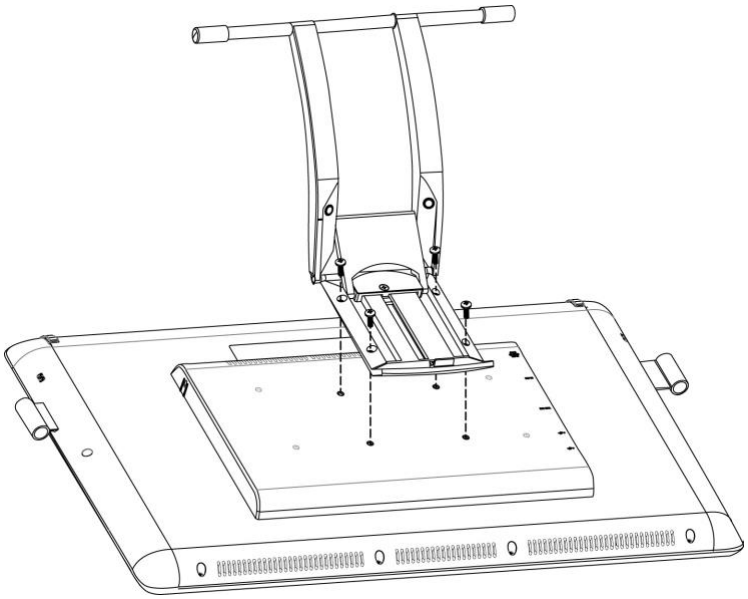

3. Align the four holes in the stand with the mounting holes in the back of the interactive pen display.

   TIP

   Additional mounting holes are provided for installing a VESA mount on the back of the interactive pen display.

4. Insert and tighten the four screws to secure the stand to the interactive pen display.

Connecting the interactive pen display to your computer

To connect the interactive pen display to your computer, refer to the Quick Connect guide that came with the product. You can also find this document on the SMART Support website at smarttech.com/kb/171255.

Orient the interactive pen display after you connect it to your computer. See *Orienting the interactive pen display* on the facing page for more information.

CAUTION

- Incompatible video cards can damage the interactive pen display's screen.

NOTES

- When a still image is displayed for a long period of time, an afterimage can remain for a short time. To prevent this, use a screen saver or other power management feature. See the knowledge base article, *Image persistence or burn in on LCD displays* at community.smarttech.com/s/article/Image-Persistence-or-Burn-In?language=en_US, for information about image persistence on a liquid crystal display screen and how to repair or prevent it.

Orienting the interactive pen display

Orient the interactive display after you connect it to your computer and any time the location of your pen touch is misinterpreted (ink appears a distance from the actual pen contact).

To orient the interactive pen display

1. In Windows operating systems, tap the **SMART Board** icon (or) in the notification area, and then select **Orient**.

   OR

   In OS X operating system software, tap the **SMART Board** icon in the Mac menu bar, and then select **Orient**.

   Targets appear on the screen.

   NOTE

   If the interactive pen display is your secondary monitor, you may need to press the **SPACE BAR** to move the orientation screen to the interactive pen display.

2. Use the cordless pen to press the center of the target.

   TIPS

   - To accurately orient the screen, press the cordless pen to the screen near the first target. The color of the target turns to green. Slide the cordless pen to the center of the target. Briefly hold the cordless pen to the center of the target before removing the cordless pen from the screen. Repeat for each target that appears.
   - You can orient a target again by pressing the **LEFT ARROW** key on your keyboard.
   - Press the **ESC** key if you want to close the orientation screen before you finish orientation. Otherwise, the orientation screen closes after you press the last target.

3. Lift the pen from the surface of the interactive pen display.

   NOTE

   The computer registers the point on the screen where you *remove* your pen from the display surface.

   The target moves to the next orientation point.

4. Repeat steps 4 to 5 until you press all targets.

   The orientation window closes.

TIPS

- To accurately orient the screen, press the cordless pen to the screen near the first target. The color of the target turns to green. Slide the cordless pen to the center of the target. Briefly hold the cordless pen to the center of the target before removing the cordless pen from the screen. Repeat for each target that appears.
- You can orient a target again by pressing the **LEFT ARROW** key on your keyboard.
- Press the **ESC** key if you want to close the orientation screen before you finish orientation. Otherwise, the orientation screen closes after you press the last target.

Connecting the interactive pen display to other devices

You can connect another display device, such as a projector or a monitor, directly to the interactive pen display. The image from the interactive pen display also appears on the other display. When you connect a projector or a monitor, the video signal from the computer is automatically sent to the projector or monitor.

NOTE

The display resolution of the connected computer must be set to a resolution supported by a secondary display device.

To connect a projector or monitor

To connect a projector or monitor to the interactive pen display, connect a video cable from the display's video out connector to the second display's video in connector. If the second display has a DVI-D or DVI-I input, use a DVI to DVI cable. If the second display has a VGA input, use a DVI-A to VGA cable (not included).

NOTES

- For details about you other device's connectors, read the instructions that came with your device.
- If you use a video cable longer than 23' (7 m), you must boost the video signal with a video distribution amplifier. See the *SMART Installation Standards* (smarttech.com/kb/171035) for tips on extending video cables.

- If you want to show HDCP content, use a video distribution amplifier that is HDCP 1.4 compliant.

Chapter 3

Installing SMART software

About SMART software 19
Installing SMART Learning Suite 20
Installing SMART Meeting Pro software 20

This chapter describes the installing of SMART software on the computer connected to the interactive pen display.

About SMART software

The interactive pen display includes a subscription to SMART Learning Suite or a license for SMART Meeting Pro software. Download and install the SMART software on the computer connected to your interactive pen to enable all its interactive features.

SMART Learning Suite and SMART Meeting Pro software are also bundled with the following software:

Software	Description
SMART Product Drivers	Enables connected computers to detect input from the interactive pen display.
SMART Ink	Enables you to write and draw in digital ink over applications, files, folders, websites and any other open window.

NOTE

You can install SMART Product Drivers without installing SMART Notebook or SMART Meeting Pro software.

Installing SMART Learning Suite

The SMART Podium SP624 model comes with a subscription to SMART Learning Suite software, which includes SMART Notebook® collaborative learning software. You can download SMART Learning Suite from smarttech.com/downloads and install it on a computer.

Contact your authorized SMART reseller (home.smarttech.com/where-to-buy) for more information about activating your subscription to SMART Learning Suite.

IMPORTANT

Make sure a computer meets the minimum requirements in the *SMART Notebook software release notes* (smarttech.com/SMARTNotebookReleaseNotes) before you install SMART Learning Suite

Installing SMART Meeting Pro software

The SMART Podium SP624P model comes with one room license and ten personal licenses for SMART Meeting Pro software. You can download SMART Meeting Pro software from smarttech.com/downloads, and install the room license on the connected computer. The personal licenses on up to ten users' computers.

You can purchase additional licenses of SMART Meeting Pro software to install on other computers. Contact your authorized SMART reseller (home.smarttech.com/where-to-buy) for more information.

IMPORTANT

Make sure a computer meets the minimum requirements in the *SMART Meeting Pro software release notes* (smarttech.com/SMARTMeetingProReleaseNotes) before you install SMART Meeting Pro.

Chapter 4

Using the interactive pen display

Turning the interactive pen display on and off 22
Using the cordless pen 23
Cordless pen components 24
Pen color buttons 25
Customizing button actions on the cordless pen 25
Available pen button actions 25
Assigning button actions on the cordless pen 26
Writing or drawing digital ink 27
Erasing digital ink 28
Using gestures 29
Using single finger gestures 29
Using multi-finger gestures 30
Working with SMART Ink 31
Starting SMART Ink manually 32
Using the dynamic toolbar 32
About SMART Ink settings 34
Using SMART Ink with Microsoft Office 34
Writing or drawing in PDF files 35
Other SMART Ink resources 35

This chapter explains thR interactive pen display's basic operation, including how to write and erase digital notes and how to work with SMART Ink and Ink Aware applications.

Turning the interactive pen display on and off

This picture and table describe the SMART Podium display's power controls and status LEDs.

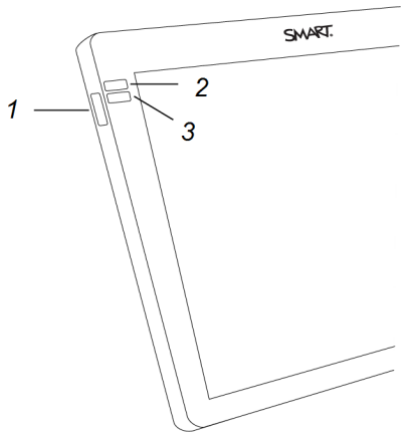

No.	Component	Description
1	Power button	Turns the interactive pen display on or off
2	Power LED	The Power LED is: • Blue when the pen display is turned on and receiving a video signal. • Orange when the pen display is turned on but not receiving a video signal. • Off, when the interactive pen display is turned off.
3	Status LED	The Status LED lights blue when the pen nib comes close to the screen surface or when you press the pen button

To turn the interactive pen display on

Press the **Power** button on the front left side of the interactive pen display.

NOTE

The interactive pen display turns off automatically after one minute without video input.

To turn the interactive pen display off

Press the **Power** button on the front left side of the interactive pen display.

Using the cordless pen

You can use the battery free cordless pen to write notes and draw on the display's screen in digital ink and activate settings you assign to the pen's rocker button.

Hold the cordless pen as you would hold any normal pen or pencil. As you work with the interactive pen display, you can rest your hand on the display screen, just as if it were a sheet of paper. You can tilt the cordless pen in any way that feels most comfortable for writing or drawing.

IMPORTANT

You can write notes over applications and your desktop only if SMART Product Drivers is running on your computer. If the SMART Board icon in the Windows notification area or Mac Dock has a small red x in the lower right corner or , SMART Product Drivers is not running on your computer or the display is not connected properly.

TIPS

- You can access SMART Settings to assign actions to your pen buttons, such as opening SMART Notebook software or advancing the slide in a Microsoft PowerPoint® presentation. To learn more, see *Customizing button actions on the cordless pen* on page 25.
- Store the cordless pen in the pen holder when it's not in use. You can attach the pen holder to either side of the display.
- You can use SMART Notebook software or SMART Meeting Pro software to make your presentations interactive and dynamic. For more details on about you can accomplish with SMART Notebook software or SMART Meeting Pro software, see the SMART software's online Help.

Cordless pen components

This illustration shows the cordless pen's components.

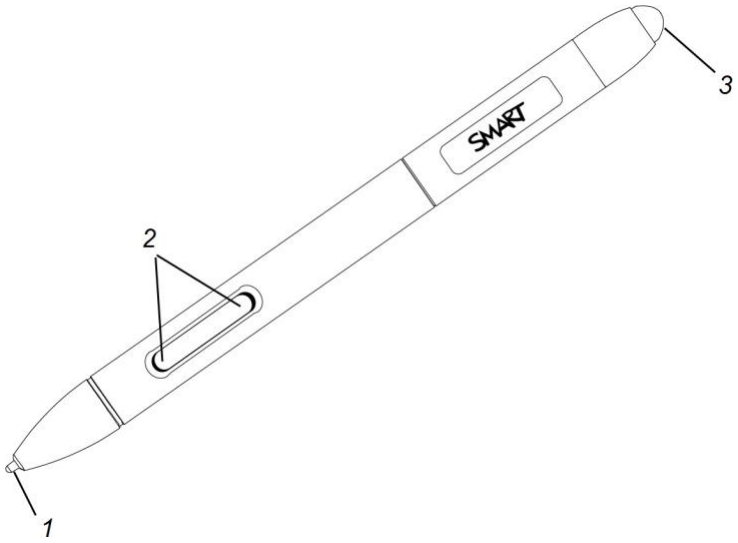

No.	Component	Description
1	Pen nib	Press a **Pen Color** button, and then touch the pen nib to the screen surface to write with digital ink. **CAUTION** Replace a cordless pen nib when the nib wears down. If a pen nib wears down too far, you might scratch or damage the interactive pen display surface. Extra nibs are supplied with the interactive pen display. **TIP** Press the pen nib to the screen firmly to make digital ink appear.
2	Buttons	Use the two buttons as a custom shortcut to a variety of actions. To learn more, see *Customizing button actions on the cordless pen* on the facing page.
3	Eraser	Turn the pen around and move the eraser over the area you want to erase, just as you would use the eraser on a pencil.

Pen color buttons

This illustration shows the pen color buttons on the side of the interactive pen display.

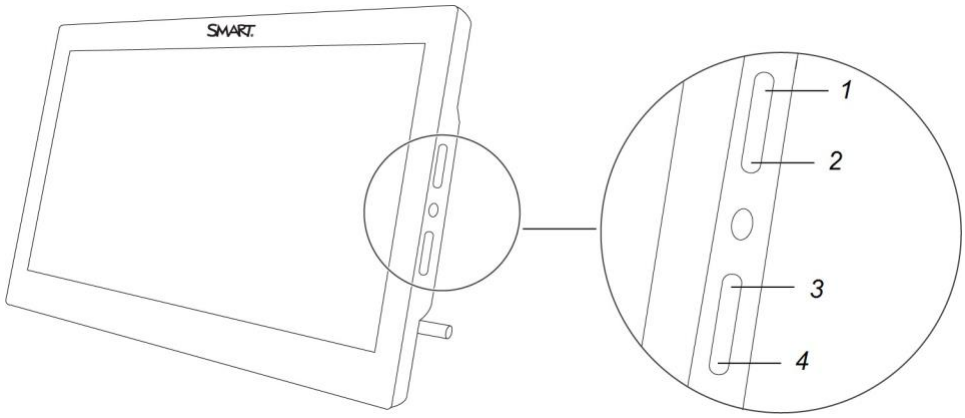

No.	Button	Press this button to:
1	Black ink	Write in black ink.
2	Red ink	Write in red ink.
3	Blue ink	Write in blue ink.

Customizing button actions on the cordless pen

Use SMART Settings to assign and change actions to the buttons on the cordless pen. The assigned action is performed when you press the button on the pen.

Available pen button actions

This table lists the actions you can assign to the buttons on the cordless pen.

Action	Description
Print page	Prints the page currently displayed on the screen
Next page	Moves to the next page in a file.
Previous page	Moves to the previous page in a file
Clear screen	Clears all digital ink and unlocked objects from a page
Right-click	Performs a right-click or control-click on the screen
Middle-click	Performs a middle-click

Action	Description
Double-click	Performs a double-click **TIP** For easier double-clicking, assign this setting to a component, such as a pen button, instead of tapping twice with the pen nib.
Floating mouse	Moves the mouse cursor to the pen's tip location without clicking (for example, to "hover" over an item on-screen to reveal a Tool Tip).
SMART keyboard	Launches the SMART on-screen keyboard
SMART Notebook software	Launches SMART Notebook software **NOTE** This option is only available when SMART Notebook software is installed on the connected computer.
Screen capture toolbar	Opens the screen capture toolbar
Eraser	The pen nib becomes an eraser until the assigned button is released **TIP** You can also access *SMART Hardware Settings* to customize the eraser thickness. See *Using the cordless pen* on page 23
Pen	Switches the cordless pen to operate in a customized mode until the assigned button is released **TIP** You can also access *SMART Hardware Settings* to customize the cordless pen's line style, fill effects and object transparency. See *Assigning button actions on the cordless pen* below.
Disabled	No action is assigned to the button

Assigning button actions on the cordless pen

Use the following procedure to access SMART Hardware Settings and assign actions to the cordless pen's buttons.

To assign button actions on the cordless pen

1. Click the **SMART software** icon in the notification area (Windows computers) or the Dock (Mac computers), and then select **Control Panel**.

   OR

   Press the **SMART Meeting Pro** icon in the notification area, and then select **Control Panel**.

   SMART Settings appears.
2. Click **SMART Hardware Settings**.
3. Select **Pen and Button settings** from the drop-down list.
4. From the on-screen options, select the button you want to customize.
5. Select an action for the button.
6. Click **APPLY** to save your settings.
7. Click **OK** to close SMART Settings.

Writing or drawing digital ink

You can use the cordless pen to write or draw over SMART Notebook software, SMART Meeting Pro software and other programs using SMART Ink. When you write or draw in an application or on the desktop, the digital ink becomes an object that you can erase, move, and manipulate in a variety of ways.

When you write in a SMART Notebook software or SMART Meeting Pro software, the digital ink becomes part of the file.

NOTES

- By default, SMART Ink starts when you first log on to your computer. If SMART Ink isn't running, you can start it manually. To learn more, see *Working with SMART Ink* on page 31.
- The interactive pen display ignores a palm resting on the screen.
- If you are writing or drawing in a Microsoft Office application, see *Using SMART Ink with Microsoft Office* on page 34.

To write or draw digital ink

1. Pick up the cordless pen.
2. Write or draw on the screen to make notes and draw over your desktop and programs.

NOTES

- Press an ink color side button to select an ink color (see *Pen color buttons* on page 25.)
- You can also press the SMART Ink dynamic toolbar icon and use the toolbar commands to customize the pen colors and line thickness, convert handwriting to text, take screen captures and use favorites. To learn more, see *Working with SMART Ink* on page 31.

Erasing digital ink

Use the eraser end of the cordless pen to erase the digital ink on the interactive pen display.

To use the cordless pen to erase digital ink

Turn the pen around and move the eraser over the area you want to erase.

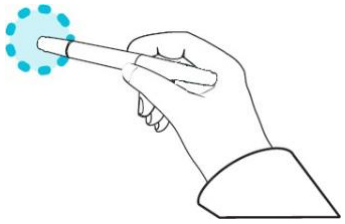

NOTE

You can also use the pen nib as a customizable eraser by using SMART Settings to assign an eraser action to one of the pen buttons. See *Customizing button actions on the cordless pen* on page 25.

Using gestures

By touching the interactive pen display's surface, you can do everything on the display through touch that you can do at your computer by using the keyboard or mouse. You can also use an array of gestures within applications.

Using single finger gestures

You can perform some gestures using one finger, including selecting an object and double-clicking. Single finger gestures include the following:

NOTE

Not all gestures work in all applications. Refer to an application's documentation to learn which gestures it supports.

Action	Description	Gesture
Selecting an object (clicking)	Quickly tap the interactive surface to select an object or option. Tap again to cancel the selection. This performs a standard mouse click. **NOTE** This gesture starts applications if your computer's operating system is set to start applications with single click.	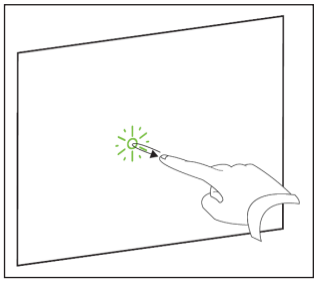
Displaying menu options (right-clicking)	Tap and hold the screen with your finger. In SMART Notebook software, Windows and Microsoft Office programs, the right-click menu appears.	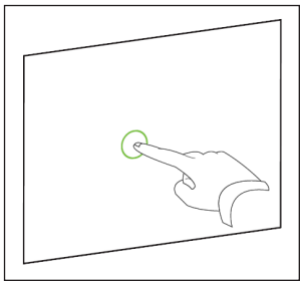

Double-clicking	Quickly Tap the interactive surface twice in the same spot. This performs a standard double-click.	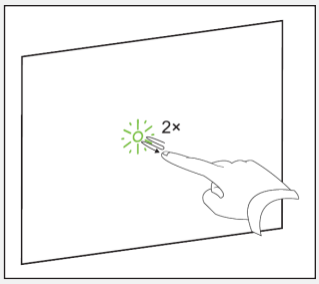
Dragging an object or scroll bar	Tap and hold an object or scroll bar on the screen. Slowly move your finger on the screen to move the object or scroll bar. When you reach the position you want, release your finger.	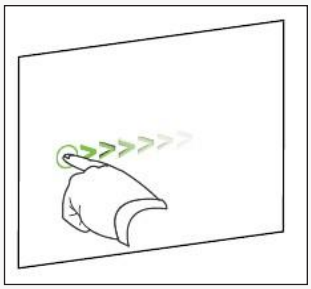

Using multi-finger gestures

You can perform some gestures using two or more fingers, including zooming, scaling, scrolling and manipulating objects. Multi-finger gestures include:

NOTE

Not all gestures work in all applications. Refer to an application's documentation to learn which gestures it supports.

Action	Description	Gesture
Zoom in, enlarge	Place one finger on each hand in the center of the area or object, and then drag your fingers away from each other.	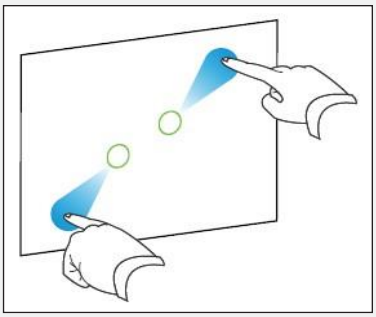

Zoom out, shrink	Place one finger on each hand on the screen at opposite ends of the area or object, and then drag your fingers toward each other. This gesture scales an object on a page or the entire page, depending on the application.	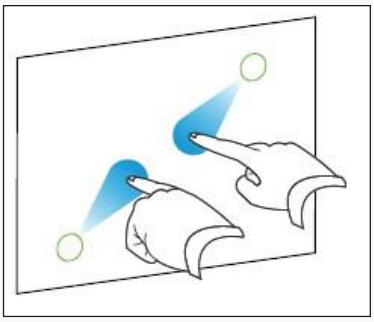
Rotating an object in place	Place one finger on either side of the object you want to rotate. Keep one finger in place and move your second finger around the object. Release your fingers from the screen when you're satisfied with the angle.	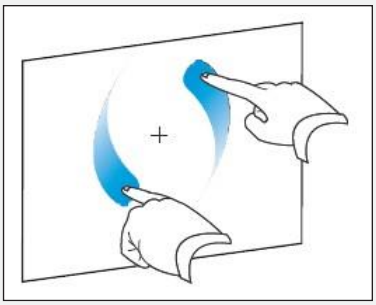

NOTE

- Not all gestures work in all applications. Refer to an application's documentation to learn which gestures it supports.
- Placing your fingers together too closely might be interpreted as a single finger.

Working with SMART Ink

The SMART Podium interactive pen display comes with SMART Learning Suite (including SMART Notebook) or SMART Meeting Pro software (see *Chapter 3: Installing SMART software* on page 19). Both feature SMART ink, which enables you to use the cordless pen or your finger to add notes or drawings to presentations on the touch screen.

By default, SMART Ink starts when you first log on to your computer. However, if SMART Ink isn't set up to start automatically, you can start it manually. See *Starting SMART Ink manually* on the next page.

After SMART Ink starts, you can open the SMART Ink dynamic toolbar and use it to write and draw, convert handwriting to text, take screen captures and use favorites.

NOTE

- If you start SMART Ink manually but your computer isn't connected to a SMART interactive product, a notification appears.
- Although the dynamic toolbar works with the desktop and all applications, some of its options vary from application to application.

Starting SMART Ink manually

If SMART Ink isn't set up to start automatically, you can use the following procedure start it manually.

To start SMART Ink manually in Windows

In Windows 7, select **Start > All Programs > SMART Technologies > SMART Ink**.

OR

In Windows 8.1, go to the *Apps* screen, and then scroll to and select **SMART Technologies > SMART Ink**.

OR

In Windows 10, select **Start > All apps**, and then scroll to and select **SMART Technologies > SMART Ink**.

To start SMART Ink manually in OS X operating system software

In Finder, go to **Applications > SMART Technologies** and double-click **SMART Ink**.

Using the dynamic toolbar

The dynamic toolbar, shown below, appears when SMART Ink starts. Opening the dynamic toolbar in full mode lets you access additional features that enhance the notes and drawings you create in digital ink.

Although the dynamic toolbar works with the desktop and all applications, some of the options it presents vary from application to application.

If the dynamic toolbar is covering something you want to see, drag it to a different part of the screen.

To open the dynamic toolbar in full mode

Tap the dynamic toolbar to open it in full mode.

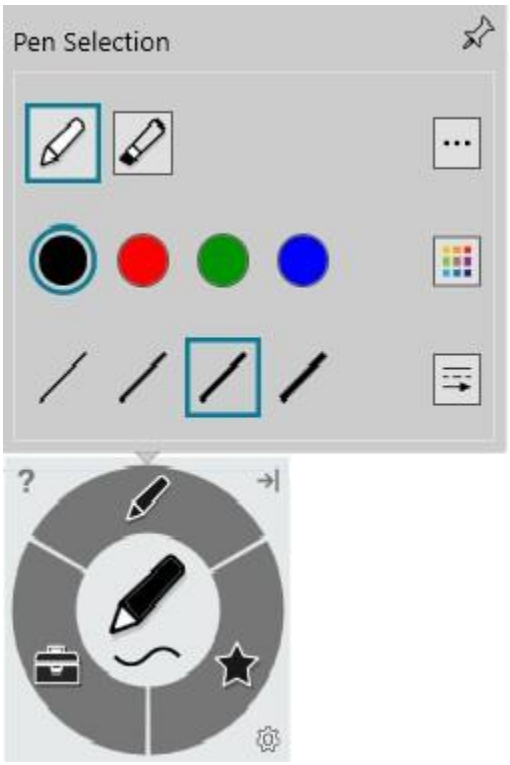

NOTE

The toolbar minimizes after 10 seconds of non-use. You can also minimize the toolbar at any time by tapping its center.

To move and dock the dynamic toolbar

You can move the dynamic toolbar to the left or right edge of the screen and dock it there by dragging it to that edge. You can also tap the docking button in the top-right corner of the dynamic toolbar.

About SMART Ink settings

You can use the *SMART Ink Settings* window to change a number of settings for SMART Ink, including:

- General settings
- Dynamic toolbar settings
- Microsoft Office settings

NOTE

If you're using SMART Ink on Windows, you can also use the SMART Ink Settings window to troubleshoot common issues.

For more information about accessing and changing SMART Ink Settings, see the *Changing SMART Ink 5 Settings* support site page at support.smarttech.com/docs/software/ink/ink-5/en/installing-and-maintaining/changing-settings.

Using SMART Ink with Microsoft Office

SMART Ink includes plug-ins that enable you to use the software with Microsoft Office applications.

NOTE

This section applies to Windows only.

Microsoft Word, Excel® and PowerPoint have their own ink tools which you can enable in SMART Ink Settings. For more information, see *Changing settings in Windows operating systems* on the Changing SMART Ink 5 Settings support site page at support.smarttech.com/docs/software/ink/ink-5/en/installing-and-maintaining/changing-settings/default.cshtml.

This table compares Microsoft's ink tools and SMART Ink:

Category	Microsoft's ink tools	SMART Ink
Purpose	Reviewing or making changes to a document	Highlighting important notes or drawing attention to content in a document
Capturing ink	Ink is inserted directly into a document.	Ink is captured in a transparent layer over a document.
Saving ink	The inserted ink is saved with the document.	Take a screen capture and save it using SMART software.

Writing or drawing in PDF files

You can write or draw in PDF files using the following tools:

- SMART Ink plugin for Adobe Acrobat® Reader (Windows only)
- SMART Ink Document Viewer

With Adobe Acrobat Reader and the SMART Ink plugin, you can write, draw and erase digital ink in PDF files. The SMART Ink plugin inserts digital ink in the PDF file as Adobe Acrobat Reader comments.

For more information on using the features of SMART Ink with Adobe Acrobat Reader, see the *Using the SMART Ink 5.1 plugin for Adobe Acrobat Reader* support site page at support.smarttech.com/docs/software/ink/ink-5/en/using/using-the-smart-ink-plugin/default.cshtml.

Other SMART Ink resources

For more information about using the features and configuration options available in SMART Ink, refer to the *SMART Ink 5* support site pages at support.smarttech.com/software/other-software/smart-ink/ink-5.

Chapter 5

Maintaining the interactive pen display

Cleaning the screen and cordless pen 37
Maintaining ventilation 38
Preventing condensation 38

This chapter provides care and maintenance information you can use to ensure the interactive pen display's best possible performance.

Cleaning the screen and cordless pen

Follow these instructions to clean the interactive pen display screen and cordless pen without damaging them or other product components. Dirt and dust can stick to the screen so you should clean the screen once a week.

CAUTION

- Do not spill liquids onto the interactive pen display or cordless pen. Both devices will fail if exposed to liquids.
- Clean the interactive pen display and cordless pen using an anti-static cloth or slightly damp cloth and light pressure. Do not apply glass cleaner, ammonia, organic solvents (such as alcohol), or even a mild detergent to the screen. If you use these cleaners, you can damage the screen's finish or the unit's electronics. Using such cleaners also voids the warranty. Always test clean a small area of the screen first near the frame.
- Do not use permanent or dry erase markers on the screen. If dry-erase markers are used on the screen, remove the ink as soon as possible with a lint-free, non-abrasive cloth.
- Do not rub the screen with a dense or rough material.
- Do not apply pressure to the screen.

To clean the screen

1. Turn off the interactive pen display and shut down your computer.
2. Disconnect the power sources for your computer and the interactive pen display.
3. Wipe the screen with a lint-free, non-abrasive, anti-static cloth.

Maintaining ventilation

The interactive pen display requires ventilation to enable the fans to cool the unit. Dust buildup in the ventilation holes can compromise cooling and lead to product failure.

CAUTION

- Avoid setting up or using the interactive pen display in an area with excessive levels of dust, humidity or smoke.
- Use a vacuum cleaner with a narrow hose end fitting to clear the ventilation holes every 3–6 months (or more frequently if required). Never allow the ventilation holes to become obstructed.

Preventing condensation

Your interactive pen display screen contains layers of glass that can collect condensation, especially in the following conditions:

- Temperature extremes with high humidity
- Rapid changes in humidity, which occurs when you operate the interactive pen display near water, such as a sink, pool, kettle or air conditioner ventilator
- Direct exposure to sunlight

Avoid these conditions.

Chapter 6

Troubleshooting the interactive pen display

Resolving issues with power and video 39
Resolving issues with the cordless pen and touch 40
Resolving issues with the image 43
VGA display issues 46
Resolving Mac-specific issues 47

This chapter explains how to troubleshoot issues with the interactive pen display.

Resolving issues with power and video

Refer to the following table for information on resolving issues with power and video.

Power LED status and fault symptom	Solution
The Power LED lights blue but you can't see an image on the display.	See *Resolving issues with the image* on page 43.
The Power LED lights orange after being blue for a time with no video output.	• Make sure the video cable isn't longer than 23' (7 m). • Turn off your computer and make sure: ◦ the video cable is correctly connected to the interactive pen display and the computer. ◦ the video cable isn't bent or broken and has no bent or broken pins in either connector. **NOTE** If you're using a video cable adapter, check those connections as well. ◦ the video card in your computer is installed correctly and is operating properly. • If the issue persists, see *Resolving issues with the image* on page 43.

Power LED status and fault symptom	Solution
The Power LED is off.	• Test the power outlet with a known working device (such as a lamp) to make sure its working properly. • Make sure the power connections at the power outlet, power supply, and interactive pen display are secure. • If the interactive pen display still doesn't turn on, contact SMART Support (smarttech.com/contactsupport).

Resolving issues with the cordless pen and touch

Refer to the following table for information about resolving issues with the cordless pen and touch interactivity.

NOTE

The interactive pen display does not support the use of fist or palm gestures for erasing.

Symptom	Solution
The Status LED fails to light when the pen nib comes close to the surface or when you press a pen button.	• Make sure the SMART Board service is running on your computer. a. Open SMART Settings, and then select **About Software and Product Support > Tools > Diagnostics**. b. If the *Status* field contains a "SMART Board service is not running" message, click the **Service** menu, and then select **Start**. • Run the Connection Wizard in SMART Settings to ensure SMART Board Services are running. Open SMART Settings, and then press **Connect Wizard**. • Make sure the USB cable is properly connected to an active port on the computer and to the interactive pen display. • Make sure the latest version of SMART Product Drivers is installed on your computer. See smarttech.com/downloads. • Make sure the computer's USB interface isn't disabled. • If a USB extender is installed between the interactive pen display and your computer, remove it and try a direct USB connection of no more than 16' 5" (5 m). • If you're using a Mac computer equipped with a USB 3.0 port, you may need to install a USB 2.0 hub between the computer and the interactive pen display.

Symptom	Solution
	• If the Status indicator still doesn't turn on, contact SMART Support (smarttech.com/contactsupport).
You can't use the cordless pen to write, erase or move the mouse.	Check the Status LED, If it's not lit, see above.
When you write or draw with the cordless pen, you see a pointer instead of digital ink.	• Make sure you have selected an ink color using one of the pen color buttons on the side of the interactive pen display. • Make sure the SMART Board service is running on your computer (see above). • Run the Connection Wizard in SMART Settings to ensure SMART Board Services are running (see above). • Ensure the body of the cordless pen is not damaged. • If the cordless pen still doesn't work, contact SMART Support (smarttech.com/contactsupport).
The interactive pen display responds to touch but not to writing with a pen.	• Make sure the SMART Board service is running on your computer (see above). • Reinstall or update SMART Product Drivers. See smarttech.com/downloads.
When you touch or write on the screen, the pointer or digital ink appears in the wrong place.	Orient the interactive pen display (see *Orienting the interactive pen display* on page 15). **NOTE** If you are using the orientation feature while multiple displays connected to the interactive pen display, press **SPACEBAR** on the keyboard until the orientation screen appears on the interactive pen display.

Symptom	Solution
The display doesn't respond to touch or writing with a pen.	• Make sure the latest version of SMART Product Drivers is installed on your computer. See smarttech.com/downloads. • Make sure the SMART Board service is running on your computer (see above). • Run the Connection Wizard in SMART Settings to ensure SMART Board Services are running (see above). **IMPORTANT** You can write notes over applications and your desktop only if SMART Product Drivers is running on your computer. If the SMART Board icon in the Windows notification area or Mac Dock has a small red x in the lower right corner or , SMART Product Drivers is not running on your computer or the display is not connected properly. • Restart the interactive pen display. See *Turning the interactive pen display on and off* on page 22.
Digital ink doesn't appear as you expect.	• Check the customized pen settings in SMART Notebook software or SMART Meeting Pro software. For more information on setting digital ink properties (such as, color, line thickness, line style and transparency), refer to the SMART software's online Help. • For additional troubleshooting information, refer to the *Troubleshooting SMART Ink 5* support site pages at support.smarttech.com/docs/software/ink/ink-5/en/troubleshooting/.
You can't write or draw in Microsoft Office.	• Make sure Microsoft Office 2013 or later is installed. • Make sure the Microsoft Word, Excel and PowerPoint ink tools are enabled in SMART Ink Settings. For more information about enabling these settings, refer to the *Changing SMART Ink 5 Settings* support site page at support.smarttech.com/docs/software/ink/ink-5/en/installing-and-maintaining/changing-settings. • Reinstall or update SMART Product Drivers. • For additional trouble shooting information, refer to the *Troubleshooting the SMART Ink 5 plug-ins for Microsoft Office* support site at support.smarttech.com/docs/software/ink/ink-5/en/troubleshooting/troubleshooting-the-smart-ink-plugins.cshtml.

Resolving issues with the image

If you encounter issues with the image on the interactive pen display, refer to the following tables. For additional information about color issues, see the documentation that came with your operating system or applications.

Symptoms	Solution
The interactive pen display shows no image and the Power LED is off.	• Make sure the power adapter is connected (see *The Power LED is off.* on page 40). • Press the **Power** button to turn the interactive pen display on. • If the interactive pen display is being used to display a connected computer's image on more than one display, ensure the computer is configured to be in cloned or extended desktop mode. • Make sure the video cable is correctly installed between the computer and interactive pen display.
The interactive pen display shows no image and the Power LED is orange.	• Ensure the video cable is properly connected. • Use the OSD options to reset the current display settings to the factory default settings. See *Appendix A: Adjusting video settings with the on-screen display (OSD) menu* on page 49.

Symptoms	Solution
The display shows a “No Input Signal” message.	• Make sure your computer isn't in Power Management mode (sleep or standby). To bring it out of Power Management mode, press any key on your keyboard, or touch the cordless pen to the interactive pen display. • Make sure your computer is turned on. • Turn your computer and the interactive pen display off, and then make sure: ◦ the video cable's connector pins aren't bent or broken. **TIP** Test the video cable by installing it between a computer and display that are known to function correctly together. ◦ the video card in your computer is installed correctly, and is operating properly. • Replace any video cable extenders between the computer and interactive pen display with a standard video cable of a length no greater than 23' (7 m). **NOTE** For more information on configuring video connections to your SMART product, see the *SMART Installation Standards* (smarttech.com/kb/171035).
The screen flashes multiple times.	• Change the video resolution/refresh rate of your computer. • Replace any video cable extenders between the computer and interactive pen display with a standard video cable of a length no greater than 23' (7 m). • If you're using an input selector switch box check your hardware connections.
Color quality is poor or inaccurate.	• Use the OSD options to return the current display parameters to the factory default settings. • If a VGA cable is installed between the interactive pen display and your computer, try: ◦ checking the cable is secure ◦ using a shorter VGA cable
When an image appears for a long time without refreshing the screen, an after image remains.	Use a screen saver or other power management feature. See the *Image persistence or burn in on LCD displays SMART Communities* article at community.smarttech.com/s/article/Image-Persistence-or-Burn-In.

<table>
<tr><th>Symptoms</th><th>Solution</th></tr>
<tr><td>There are lines or snow on the screen or the image is flickering or flashing.</td><td>

Set the connected computer's resolution and refresh rates to one of the following values supported by the interactive pen display:

<table>
<tr><th>Resolution</th><th>Refresh rate</th></tr>
<tr><td>640 × 480</td><td>60Hz</td></tr>
<tr><td>800 × 600</td><td>60Hz</td></tr>
<tr><td>1024 × 768</td><td>60Hz</td></tr>
<tr><td>1280 × 800</td><td>60Hz</td></tr>
<tr><td>1366 × 768</td><td>60Hz</td></tr>
<tr><td>1280 × 1024</td><td>60Hz</td></tr>
<tr><td>1680 × 1050</td><td>60Hz</td></tr>
<tr><td>1920 × 1080</td><td>60Hz</td></tr>
</table>

Open the on-screen display menu. If it appears correctly, the issue is with the video input.
Restart the interactive pen display. See Turning the interactive pen display on and off on page 22.

</td></tr>
<tr><td>There are bright spots on the screen.</td><td>

Open the on-screen display menu. If it appears correctly, the issue is with the video input.
Take a photograph of the screen and send it to SMART support. If SMART support determines that the issue is with the screen and the interactive pen display is under warranty, you may be eligible for a replacement.

</td></tr>
<tr><td>The image isn't clear. There are lines, double images or other distortions.</td><td>Adjust the interactive pen display's image settings. See Appendix A: Adjusting video settings with the on-screen display (OSD) menu on page 49.</td></tr>
<tr><td>The image is cut off or shifted to the left or right.</td><td>

Adjust any connected computers' video settings, particularly zoom, crop and underscan. See the computer's operating system documentation.
If the computer's desktop is entirely black, change it to dark gray or a different color.
If the computer's background is extended across multiple screens, duplicate the desktop across the screens or set the interactive pen display as the only screen.

</td></tr>
<tr><td>The image doesn't fill the entire screen.</td><td>Adjust any connected computers' video settings, particularly overscan. See the computer's operating system documentation.</td></tr>
</table>

Symptoms	Solution
You're experiencing other issues with image quality, or the previous solutions don't resolve the issue.	Contact SMART Support (smarttech.com/contactsupport)..

VGA display issues

If you encounter image issues with the interactive pen display with a VGA connection, refer to the following table.

Symptom	Solution
The image ripples or flickers.	• Use the OSD options to return the display settings to the factory default settings. • Use OSD options to adjust the phase and pitch. • Make sure the display adapter or video card matches the resolution and refresh rate specifications of the interactive pen display. • Select **Auto Adjust** in the OSD options to automatically optimize the interactive pen display's image. If necessary, use the OSD options to adjust the phase and pitch. **NOTE** See *Appendix A: Adjusting video settings with the on-screen display (OSD) menu* on page 49.
The image isn't clear, and text or other portions of the screen appear blurred.	• Select **1:1** in the *Scaling* OSD option to display the image at the actual resolution. • Select **Auto Adjust** in the OSD options to automatically optimize the display screen image. If necessary, use the OSD options to adjust the phase and pitch. • Turn the interactive pen display off and then back on.
The image appears shifted to the left or right on the screen. OR The image size isn't correct.	• Select **1:1** in the *Scaling* OSD option to display the image at the actual resolution. • Select **Auto Adjust** in the OSD options to automatically optimize the display screen image. If necessary, use the **Other** OSD option to adjust the phase and pitch, and the vertical and horizontal positions. **NOTE** See *Appendix A: Adjusting video settings with the on-screen display (OSD) menu* on page 49.

Resolving Mac-specific issues

If you encounter issues using the interactive pen display with a Mac computer, refer to the following table.

Symptom	Solution
At startup, a message states that SMART Product Drivers failed to load or the interactive pen display preferences aren't created.	• Make sure the Power LED is on and the USB cable is securely connected to an active USB receptacle on your computer or to a USB hub. • Connect the interactive pen display to a different USB port. a. Select **Finder > Utilities > System Profiles > Content > Hardware > USB**, and then make sure your USB pen display model is listed. b. Select **Finder > Utilities**. c. Start the **Disk Utility** program, and then d. Run **Repair Disk Permissions** from the *First Aid* tab. If this doesn't resolve the problem, contact *SMART Support*.
Handwriting Recognition doesn't work correctly.	Ink preference files may be damaged. Remove the damaged Ink preference files (see *To remove ink preference files from your Mac computer* below).

You can remove damaged ink preference files from your Mac computer to resolve some issues with handwriting recognition and digital ink.

To remove ink preference files from your Mac computer

1. Start your computer in Administration mode.
2. Select **Apple menu > System Preferences > Ink**, and then select **to disable handwriting recognition**.
3. Select **Finder > Home > Library > Preferences**, and then remove the following files:
   - **com.apple.ink.framework.plist**
   - **com.apple.ink.inkpad.plist**
   - **com.apple.ink.inkpad.sketch**

   NOTE

   The files are recreated automatically when you enable handwriting recognition in the next step.

4. Select **Apple menu > System Preferences > Ink**, and then enable handwriting recognition.

Contact Apple Support if the handwriting recognition and digital ink issues persist.

Appendix A

Adjusting video settings with the on-screen display (OSD) menu

Changing settings in the OSD menu 50
OSD menu settings 51
- Brightness/Contrast 51
- Custom RGB 51
- Color Presets 51
- Display Settings 52
- VGA Settings 52
- Other Settings 52

If you're using a VGA video input, the screen settings adjust automatically when you turn on the interactive pen display. This feature adjusts the phase settings and the vertical and horizontal positions. You can also use the on-screen display (OSD) menu to adjust the screen settings.

IMPORTANT

Changing color, color temperature, contrast, brightness, or backlight settings overrides the color profile used with interactive pen display.

NOTES

- For the best display quality, set the video card to the 1920 × 1080 native resolution of the interactive pen display.
- If the interactive pen display doesn't adjust the screen settings automatically, you can use the Auto Adjust OSD option (VGA only).

Changing settings in the OSD menu

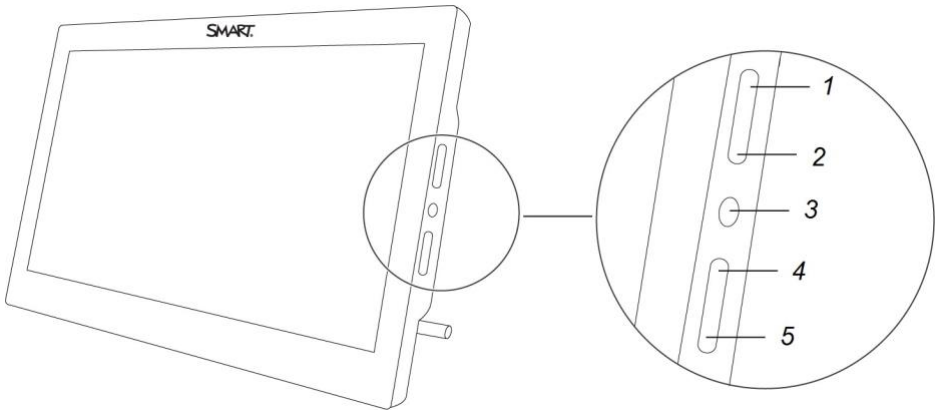

No.	OSD control
1	Select item
2	Up arrow
3	OSD menu button
4	Down arrow
5	Previous menu item

To change settings in the OSD menu

1. Press the OSD menu button on the side control panel.

   The OSD menu appears.

2. Press and to browse to the sub-menu that contains the setting you want to change.

3. Press to select the sub-menu.

> **TIP**
>
> Press to return to the previous screen.

4. Press and to browse to the setting you want to change.
5. Press to select the setting, and then press or to change the setting.

   The changes you make are applied immediately.
6. Press to save your changes.
7. Press to return to the previous screen.

   OR

   Press the OSD menu button to exit the on-screen menu.

OSD menu settings

These tables describe the settings available through the OSD menu.

Brightness/Contrast

Menu item	Function
Brightness	Adjusts the brightness of the image and background
Contrast	Adjusts the difference between the lightest and darkest areas of the image
Backlight	Adjust the back light brightness

Custom RGB

Menu item	Function
Red	Adjust the color values for red
Green	Adjust the color values for green
Blue	Adjust the color values for blue

Color Presets

Menu item	Function
5000K	Sets the color temperature to 5000K

Menu item	Function
6500K	Sets the color temperature to 6500K
9300K	Sets the color temperature to 9300K
Direct	Displays colors directly from the video card without any adjustment

Display Settings

Menu item	Function
Scaling	Sets the scaling to: • Full: Resizes the image to fill the whole screen. • Aspect: Resizes the image to fill as much of the screen as possible while maintaining the correct aspect ratio. • 1:1: Displays the image at the actual resolution.
Horizontal Position	Controls the image's horizontal position within the display area
Vertical Position	Controls the image's vertical position within the display area

VGA Settings

NOTE

The VGA Settings menu is only accessible when a VGA cable is used to connect the interactive pen display to a computer.

Accessing the VGA settings menu enables you to adjust the display's Phase and Pitch settings. You can also enable settings to be set automatically by selecting Auto Adjust.

Other Settings

Menu item	Function
Language	Selects the language used by the OSD menu
Menu Transparency	Changes the opacity of the OSD menu background
Reset	Restores the display's settings to their factory default settings

Appendix B

Hardware environmental compliance

SMART Technologies supports global efforts to ensure that electronic equipment is manufactured, sold and disposed of in a safe and environmentally friendly manner.

Waste Electrical and Electronic Equipment (WEEE)

Electrical and electronic equipment and batteries contain substances that can be harmful to the environment and to human health. The crossed-out wheeled bin symbol indicates that products should be disposed of in the appropriate recycling stream and not as regular waste.

More information

See smarttech.com/compliance for more information.

SMART TECHNOLOGIES

smarttech.com/support

smarttech.com/contactsupport

smarttech.com/kb/171254